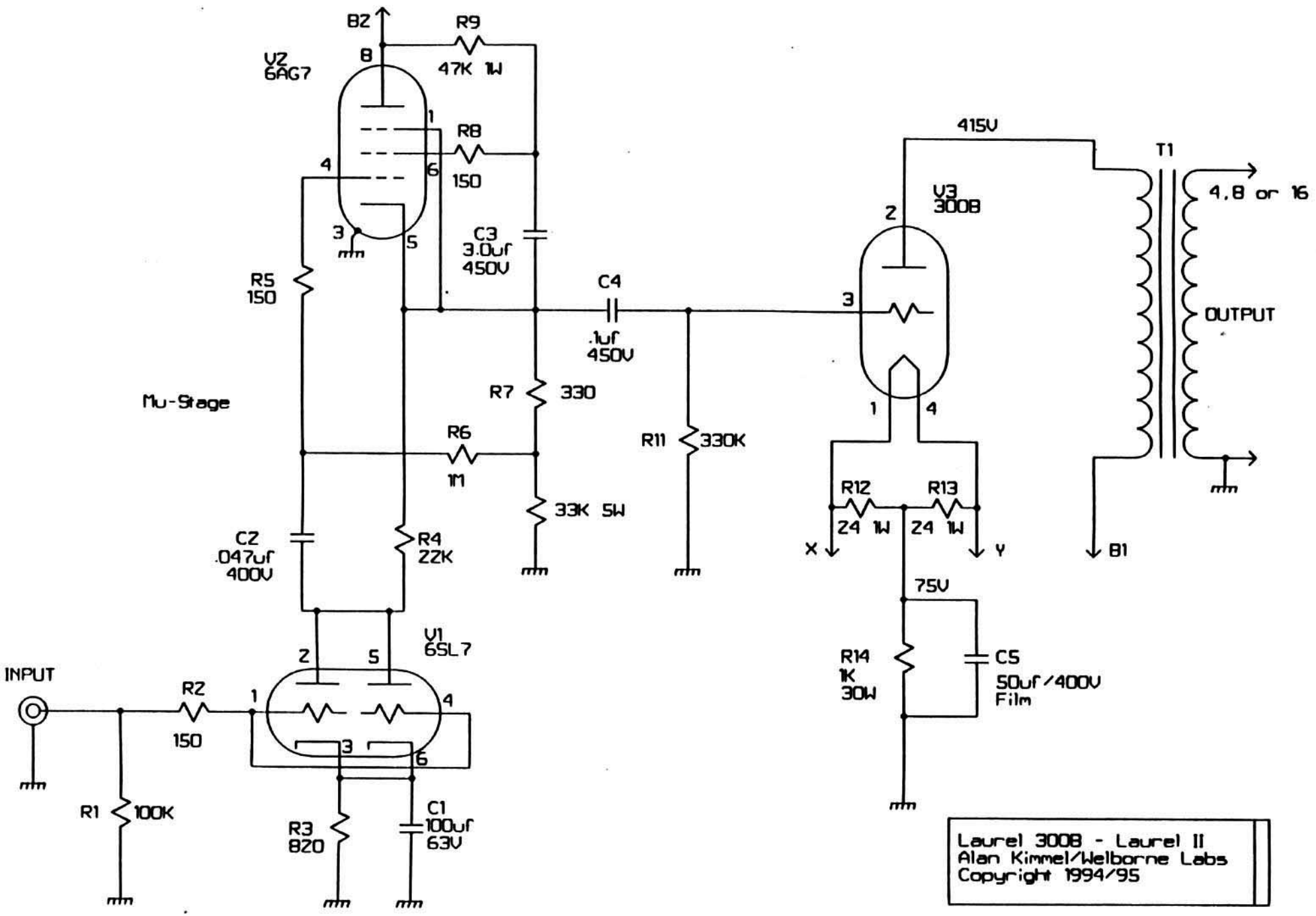
B2
R9
47K 1W
V2
6AG7
R8
150
C3
3.0uf
450V
R5
150
C4
.1uf
450V
Mu-Stage
R7
330
R6
1M
33K 5W
R11
330K
C2
.047uf
400V
R4
22K
V1
6SL7
INPUT
R2
150
R1
100K
R3
820
C1
100uf
63V
415V
V3
300B
T1
4,8 or 16
OUTPUT
R12
Z4 1W
R13
Z4 1W
X
Y
B1
75V
R14
1K
30W
C5
50uf/400V
Film
Laurel 300B - Laurel II
Alan Kimmel/Welborne Labs
Copyright 1994/95